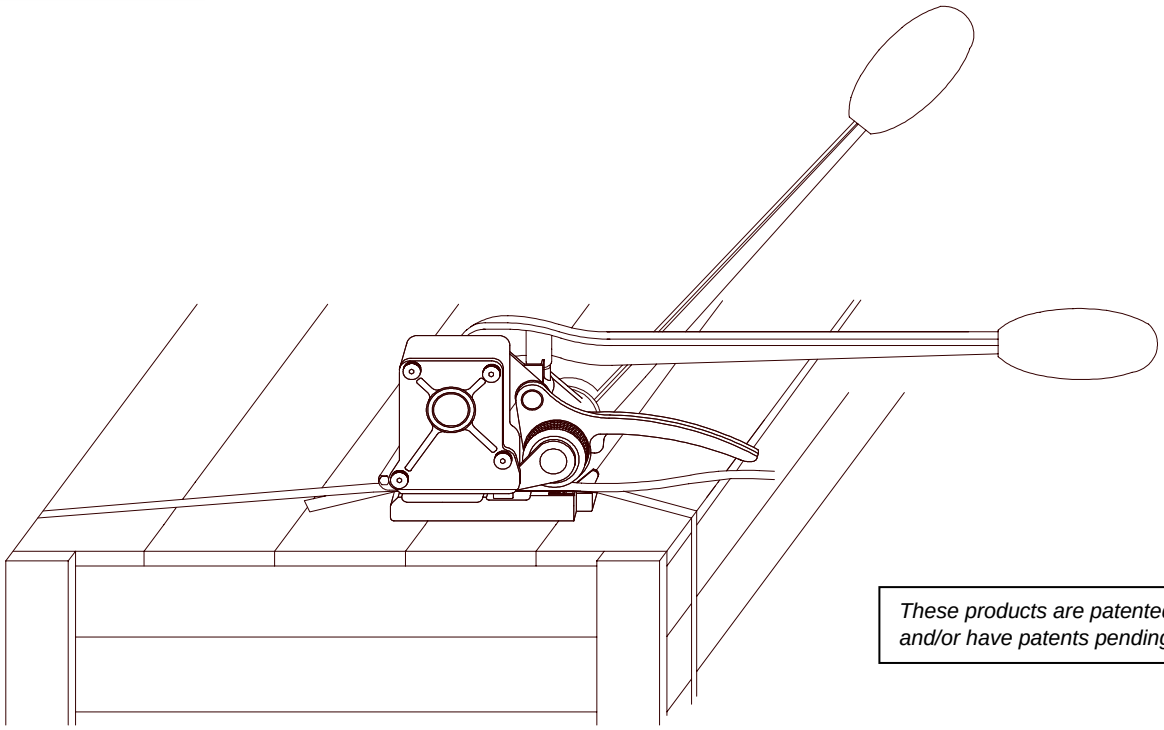

These products are patented and/or have patents pending.

OPERATION MANUAL AND PARTS LIST

MS31

SERIES TOOLS

SECTION	CONTENTS	PAGE
1	**SAFETY INSTRUCTIONS**	2-3
2	**SPECIFICATIONS**	4
3	**OPERATING INSTRUCTIONS**	5-6
4	**MAINTENANCE**	7
5	**ADJUSTMENTS**	7
6	**REPLACEMENT OF PARTS**	7-11
7	**DIAGRAM**	12
8	**PARTS LIST**	13-14

© Copyright protected Z.R. Tool Inc. All rights reserved.

ZR-0073

1. SAFETY INSTRUCTIONS

READ ALL INSTRUCTIONS BEFORE OPERATING TOOLS

Congratulations on your purchase of the world's finest steel strapping tool. In order to insure years of problem free performance operators of this tool must be familiar with all safety, operational, and maintenance procedures contained in this manual.

1. Safety Glasses

- Wear safety glasses with side shields or safety goggles when operating tool.

2. Gloves

- Wear gloves when handling strapping or when operating tool to prevent possible cuts and scratches.

3. Safety Shoes

- Wear safety shoes to protect feet from injury.

4. Training

- Only trained personnel should operate these tools. It is imperative that the entire contents of the tool manual are fully read and understood. Personnel are to be given a full and complete demonstration.

5. Maintenance

- Inspect tool daily to insure correct operation. Loose, worn or damaged parts must be serviced immediately as required. Never operate the tool if a part is worn or broken as this will only further damage the tool and may result in injury.

6. Strap Breakage

- Excessive tensioning may cause strap breakage. When tensioning strapping, always stand to one side of the strap. If it breaks you will not be in its direct path.
- If the load has sharp corners always use edge protectors.

7. Strap Cutting

- Only use strap cutters approved to cut strapping within your specifications. When cutting strapping always stand to one side of the strap being cut, pressing the strap against the package above the cutter, making sure the strapping rebounds away from you.

8. Maintain Stability

- Always maintain proper footing and balance when operating the tool to prevent a fall or injury.
- Never operate the tool while in an awkward position or in such a manner that a hand could slip resulting in a loss of balance.

9. Maintain Safety Perimeter

- Always maintain a clear and uncluttered work area.
- When using tool other people should remain at a safe distance to avoid possible injury.

10. Tool Alterations

- Never alter any tool. Do not add extensions to lengthen the handles as this could damage the tool and is unsafe.
- Only use genuine ZR parts, including all fasteners and bearings as they are custom made for extreme use conditions.

11. Strapping

- Use only new strapping within specifications for the tool. Using old, damaged, or incorrect strapping may result in strap breakage and damage to the tool.
- When dispensing strapping use a specifically designed strap dispenser. When not in use, tuck strap end back into dispenser.

12. Ensure a Correct Sealless Joint is Formed

- Regularly inspect the sealless joint, it must conform to the illustration below.

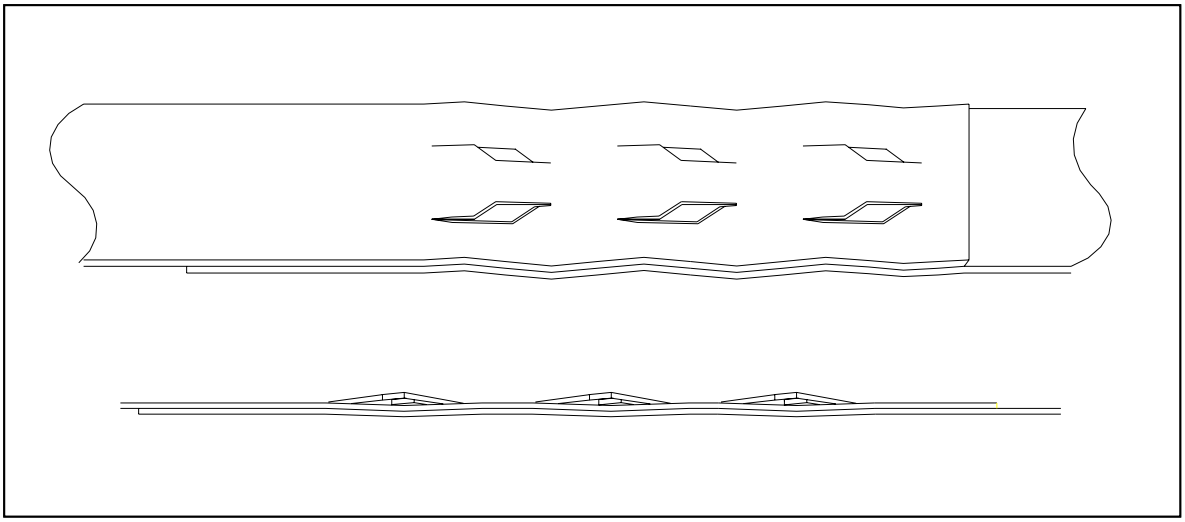

- A correct sealless joint is formed when the upper strap is sheared clean and the knife does not leave scratch marks on the lower strap. Approximately one thickness of strap must show in the interlock.
- The sealless joint is too deep if the lower strap is scratched by the knife. The sealless joint is not deep enough if the upper strap is not sheared clean. In both these instances the sealing depth must be adjusted following instructions on page 7.
- Never attempt to make a sealless joint without having the straps under full tension.
- If the sealless joint does not appear properly formed it must be cut off and reapplied. Check the tool for correct operation, as well as loose, worn, or damaged parts and service immediately.
- **Never handle or ship any load with sealless joints which do not appear properly formed. Incorrectly formed sealless joints may not secure the load. This could result in serious injury.**

MS31

2. SPECIFICATIONS

Weight	9.8 lbs.	(4.4 kg.)
Base Length	4.2 "	(105 mm)
Base Width	2.4"	(60 mm)
Height	4.2"	(105 mm)

Strapping Specifications

This tool is designed for use with regular duty steel strapping (107,000 psi / 750 N/mm^2) to high tensile steel strapping (156,000 psi / 1100 N/mm^2).

Model Number	*Strap Width*	*Strap Thickness*
MS31-1	3/4” (19 mm)	.025” - .031” (0.635 mm - 0.80 mm)

THIS TOOL IS NOT DESIGNED TO BE USED WITH STRAPPING BELOW .025" (0.635 mm) OR ABOVE .031” (0.80 mm) THICKNESS.

3. OPERATING INSTRUCTIONS

A

- Place strapping tightly around package and hold in place with left hand.
- Take tool with right hand and pull the feedwheel lever towards the sealing lever.
- Insert both portions of the strap with left hand into the sealing section.
- Release the feedwheel lever and make certain both straps are fully seated in and against the strap stop front and the strap stop rear as well as held firmly in place by the strap guide. If not, this may result in permanent damage to the feedwheel in the form of flat spots.

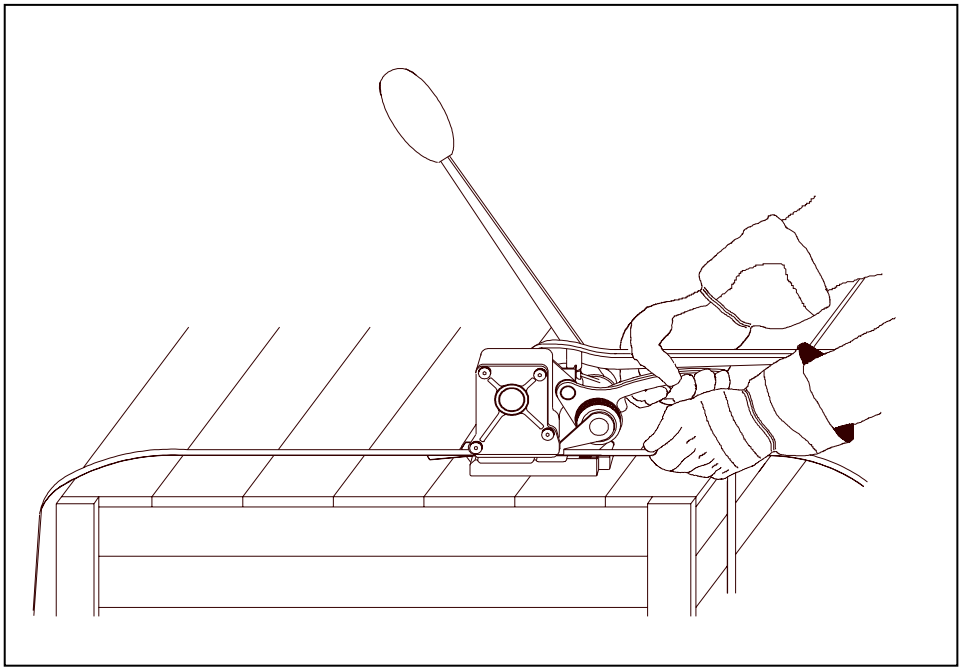

B

- Hold tool firmly with left hand on the sealing lever.
- With right hand move the tension lever forwards and backwards until the desired tension is obtained.

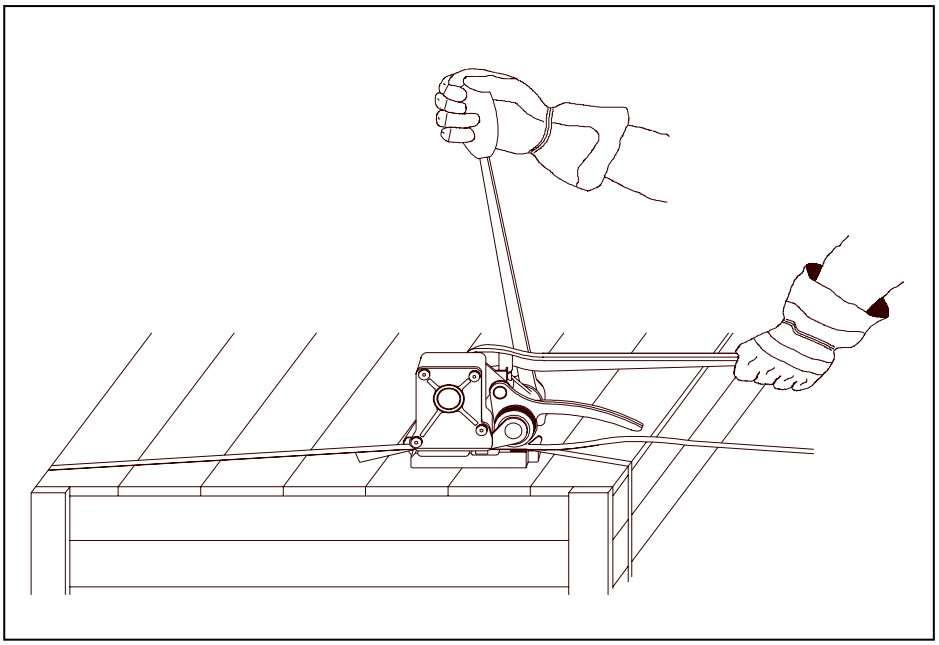

C

- Place right hand firmly on the tension lever for supporting the tool.
- With left hand push the sealing lever forward until it reaches the stop.

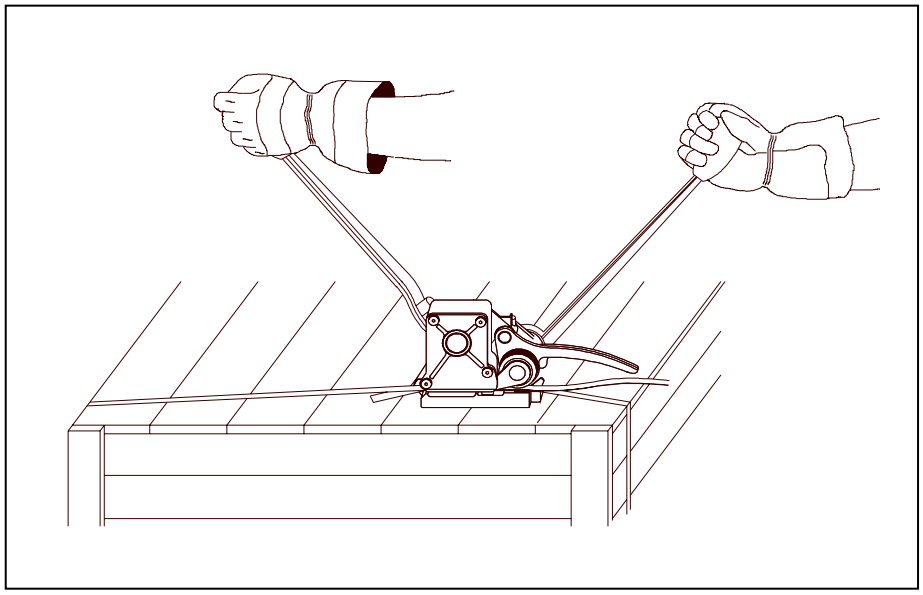

D

- Move the sealing lever back to its original position.
- To release the tool, with right hand pull the feedwheel lever toward the sealing lever, pushing the lever to the left away from the sealing section.

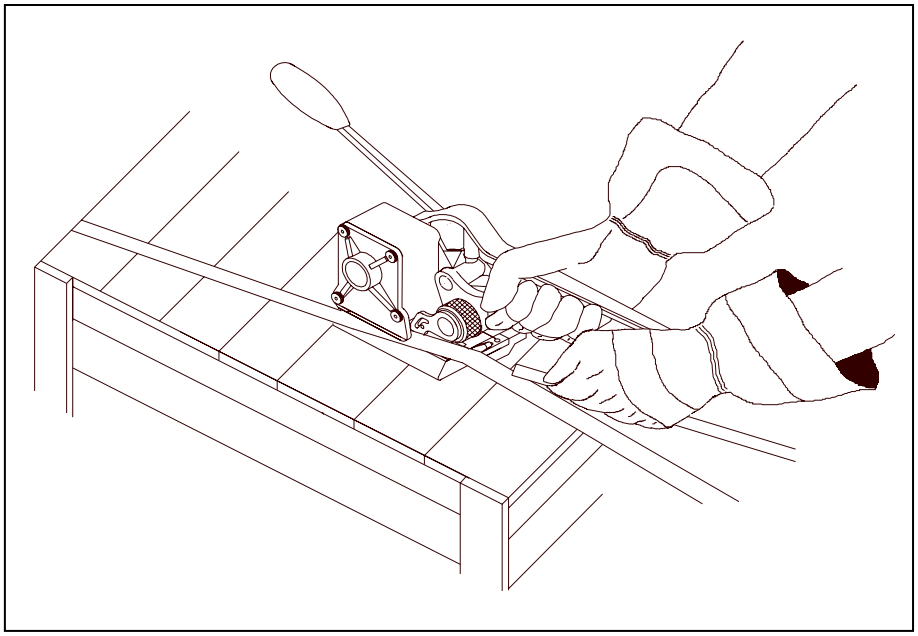

4. MAINTENANCE

1. Inspect the tool daily for loose, worn, or damaged parts and service immediately as required.
2. Clean the sealing section regularly with compressed air to remove any dust and particles.
3. Lubricate the die (position 16) and punch (position 25) daily with a thin grade of oil. This will reduce friction and extend the life of the tool as well as the parts.
4. Spray the entire tool daily with a rust preventative, this will prevent any rust formation.

TO REMOVE JAMMED STRAPPING FROM SEALING SECTION:

Remove external retaining ring (position 22), remove extension spring (position 32) only from the side which is hooked around spring tension spring (position 21), remove shaft (position 23), remove feedwheel lever assembly from its position. Then easily remove jammed strapping from sealing section. Re-install feedwheel lever assembly, shaft, extension spring and external retaining ring back into position.

5. ADJUSTMENTS

TO ADJUST SEALING DEPTH:

Loosen nut (position 31), adjust hexagon socket set screw (position 44) with a hexagon key, turn counter clockwise to increase sealing depth, or turn clockwise to decrease sealing depth, re-tighten nut.

TO ADJUST CLEARANCE BETWEEN THE FEEDWHEEL (POSITION 5) AND GRIPPER (POSITION 26):

The clearance between the feedwheel and the gripper should be .020" (.51mm). If the clearance is more or less than this, it must be adjusted.
To reduce the clearance: loosen nut (position 31A), turn hexagon socket set screw (position 30) counter clockwise with a ball hexagon key, re-tighten nut.
To increase the clearance: loosen nut (position 31A), turn hexagon socket set screw (position 30) clockwise with a ball hexagon key, re-tighten nut.

6. REPLACEMENT OF PARTS

Note: If you are not familiar with the following replacement procedures, please contact your authorized ZR dealer for a demonstration or for service.

TO REPLACE A BEARING (POSITIONS 6, 9, 10, 45, 49, or 54):

1. Remove old bearing by heating the area around the bearing with a torch to approximately 350°F (175°C). This will release the Loctite* which is presently around the surface of the bearing.
2. While hot, push out old bearing with correct diameter tooling.
3. Clean bearing or bushing seat area (bore) thoroughly to remove old Loctite* with Loctite* CHISEL MC FREE. Then clean new bearing or bushing thoroughly with Naptha (camp fuel).
4. Place a thin amount of Loctite* No. RC603 around bore and bearing.
5. Press bearing into place with correct diameter tooling.
6. Let cure for 24 hours before using.
7. Apply a thin layer of new white grease around bearing contact surface for lubrication.

TO REPLACE THE FEEDWHEEL (POSITION 5):

1. Remove external retaining ring (position 3).
2. Remove extension spring (position 32) only from the side which is hooked around spring tension pin (position 21).
3. Remove the tensioning assembly (consisting of tension lever (position 11) and feedwheel shaft (position 2)).
4. Install new feedwheel with the " → " marking facing the strap guide (position 4), re-install tensioning assembly observing the key way position during assembly.
5. Re-position strap guide onto the protruding feedwheel shaft.
6. Re-install external retaining ring.
7. Before using tool check clearance between the feedwheel and gripper and adjust as required following instructions on page 7.

TO REPLACE THE GRIPPER (POSITION 26):

Note: The gripper is held in a non-adjustable position with spring tension pin (position 27).

1. To remove gripper, use a drive pin punch matching the diameter of the spring tension pin (position 27) and drive the spring tension pin into the tool base until the gripper comes loose from its position.
2. Remove extension spring (position 32) only from the side which is hooked around spring tension pin (position 21).
3. Remove external retaining ring (position 3).
4. Push out tensioning assembly (consisting of tension lever (position 11) and feedwheel (position 5) for unobstructed access to gripper.
5. Lift feedwheel lever (position 7) to access gripper.
6. Clean cavity area and add one drop of a thin grade of oil in the cavity.
7. To install new gripper, place the gripper into the cavity of the tool base. Re-install the spring tension pin and drive it into the hole of the tool base until it is flush with the tool base.
8. Before using tool check clearance between the feedwheel and gripper and adjust as required following instructions on page 7.

TO REPLACE THE KNIFE (POSITION 17):

1. Remove housing cover (position 50) by removing 4 cover screws (position 48).
2. With pliers, pull knife from slot on die and knife block (position 13).
3. Install new knife observing spring tension pin (position 18) aligns with same slot on die and knife block.
4. Make certain that the area is clean and well greased with white grease.
5. Important: Make certain that the roller (position 57) is in its position.
6. Re-install housing cover, then re-install cover screws along with washers (position 60).
7. Perform one seal and check strapping to ensure the cutting depth is correct. The knife depth is correct if the upper strap is sheared clean and the knife does not leave scratch marks on the lower strap. The knife depth is too deep if the lower strap is scratched by the knife. The knife depth is not deep enough If the upper strap is not sheared clean. In both these instances the sealing depth must be adjusted following instructions on page 7.

TO REPLACE THE PUNCH (POSITION 25):

1. Remove 2 cheese head machine screws (position 24A) located on the underside of the tool base.
2. Remove punch, clean area, replace with new punch, then re-install cheese head machine screws with a pin head amount of Loctite* No. 277 on the thread of each screw.

TO REPLACE THE DIE (POSITION 16):

1. Remove housing cover (position 50) by removing 4 cover screws (position 48).
2. Remove sealing lever (position 47) by loosening hexagon socket cap screw (position 46).
3. Remove woodruff key (position 1).
4. Remove eccentric shaft (position 53).
5. Remove the total internal assembly by tilting it at a 20° angle (see diagram below) and pull out with pliers by eccentric shaft plunger (position 55), at the same time making sure to hold internal assembly together with other hand, exposing die on the underside of the die and knife block (position 13).
6. Remove 3 cheese head machine screws (position 15).
7. Remove die, clean area, and replace with new die, then re-install cheese head machine screws with a pin head amount of Loctite* No. 277 on the thread of each screw.
8. To re-install the internal assembly, precisely follow diagrams on page 10 and 11.
9. Re-install the eccentric shaft observing its relative position to the cam (position 34).
10. The cam lever (position 52) must engage with its tip into the cavity of the cam. The components should align together and operate smoothly. Do not force the parts together.
11. Make certain that the area is clean and well greased with white grease.
12. Important: Make certain that the roller (position 57) is in its position.
13. Re-install housing cover, then re-install cover screws along with washers (position 60).
14. Re-install woodruff key and sealing lever.

REMOVAL OF INTERNAL ASSEMBLY MS31

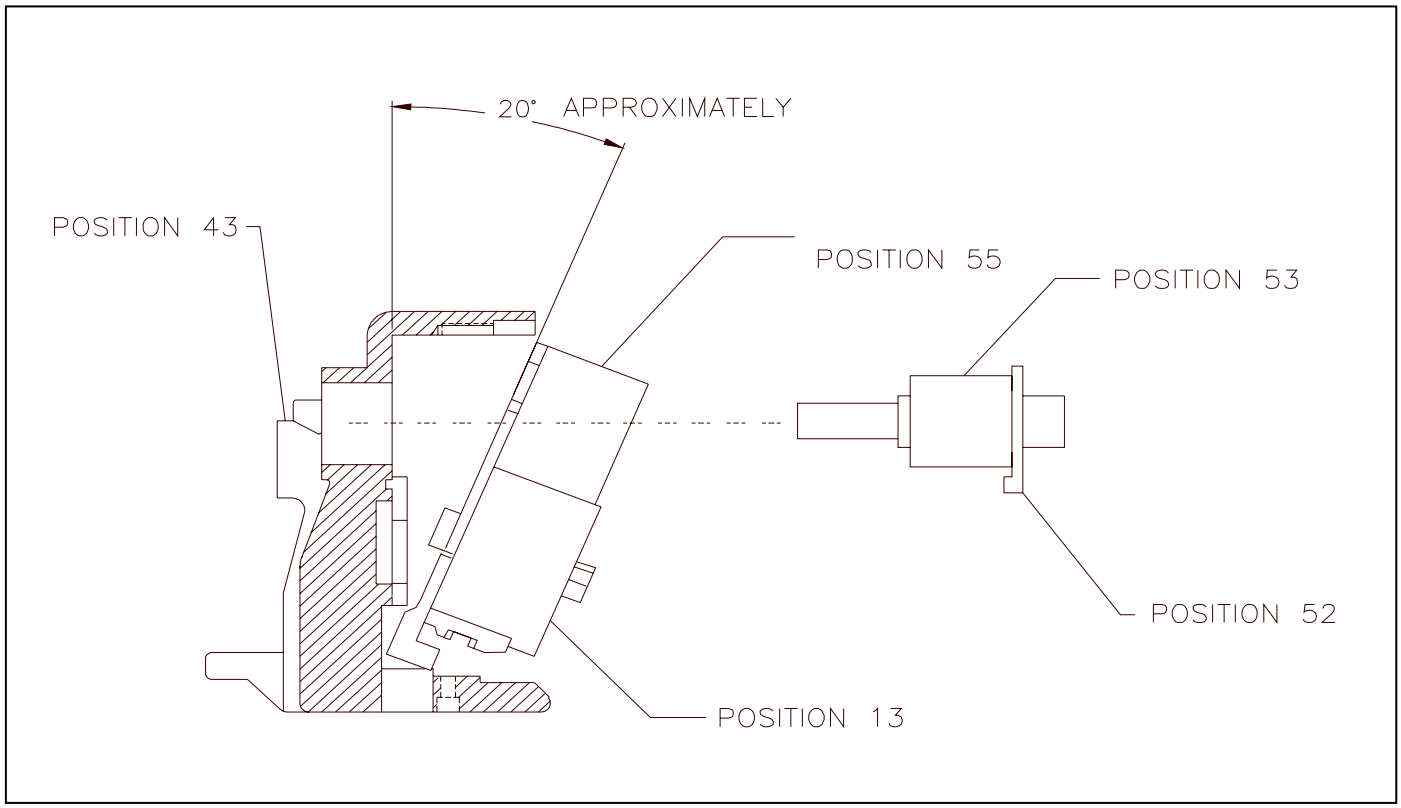

*Loctite is a registered trademark of the Loctite Corporation.

INSTALLATION OF INTERNAL ASSEMBLY
MS31 SERIES TOOLS

Make certain to follow all instructions <u>precisely</u> or it will result in broken or damaged parts .

Fig. 1A

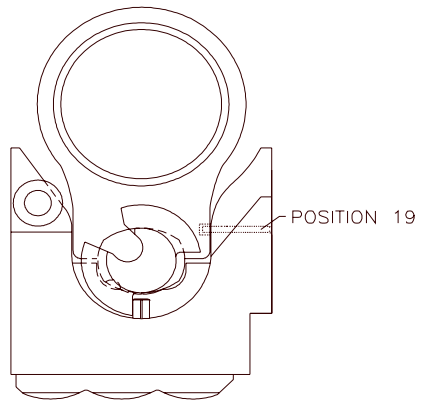

Place the cam as per drawing, with the long width sitting flat in the die and knife block. Add white grease throughout. Then place the eccentric shaft plunger on top of the cam and fasten by pushing the connection pin, position 19, (making sure the groove on this pin is facing the outside of the die and knife block) through hole in die and knife block and into like slot on eccentric shaft plunger.

Fig. 1B

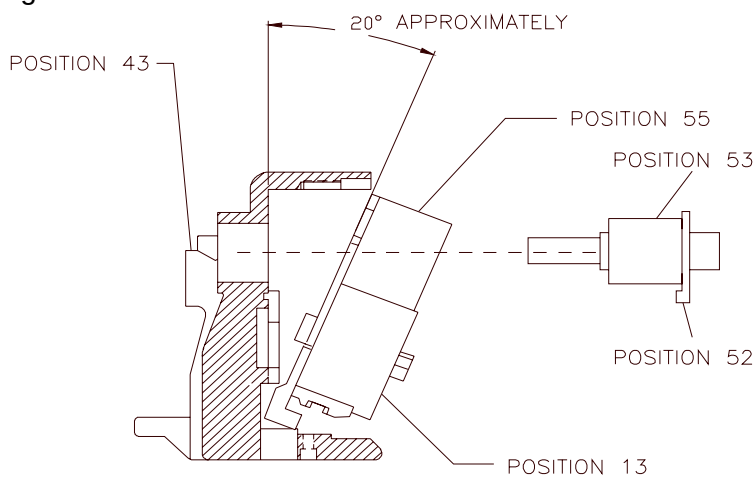

Tilt the internal assembly approximately 20° and place into housing making sure the back up hook is sitting in its slot in the housing.

Fig. 1C

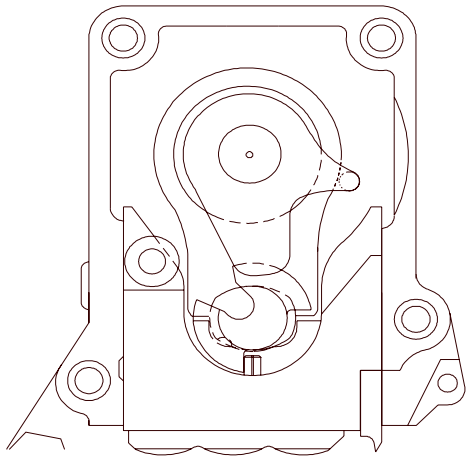

Make sure the cam lever is attached to the eccentric shaft. Then push it through the hole of eccentric shaft plunger and the housing until it is flush.

INSTALLATION OF INTERNAL ASSEMBLY
MS31 SERIES TOOLS

Fig. 1D

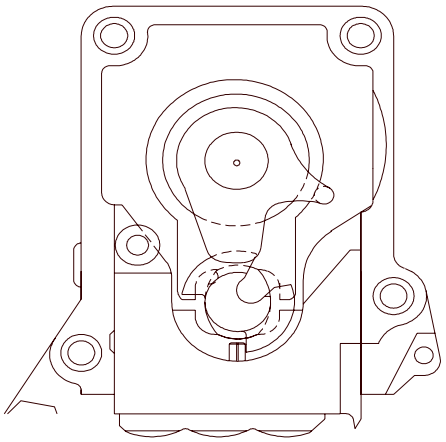

Turn the cam with pliers in a clockwise direction until it sits in position shown in this drawing.

Fig. 1E

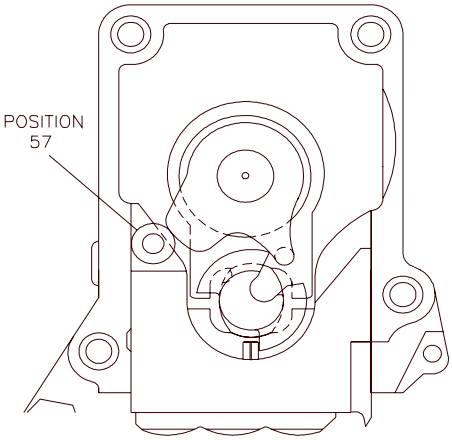

Turn cam lever in a clockwise direction with fingers until it sits in front of the cavity of the cam.
Important: Make certain that the roller (position 57) is in its position.
Then install the housing cover and the sealing lever making sure they sit properly and operate smoothly, do not force.

7. MS31 DIAGRAM

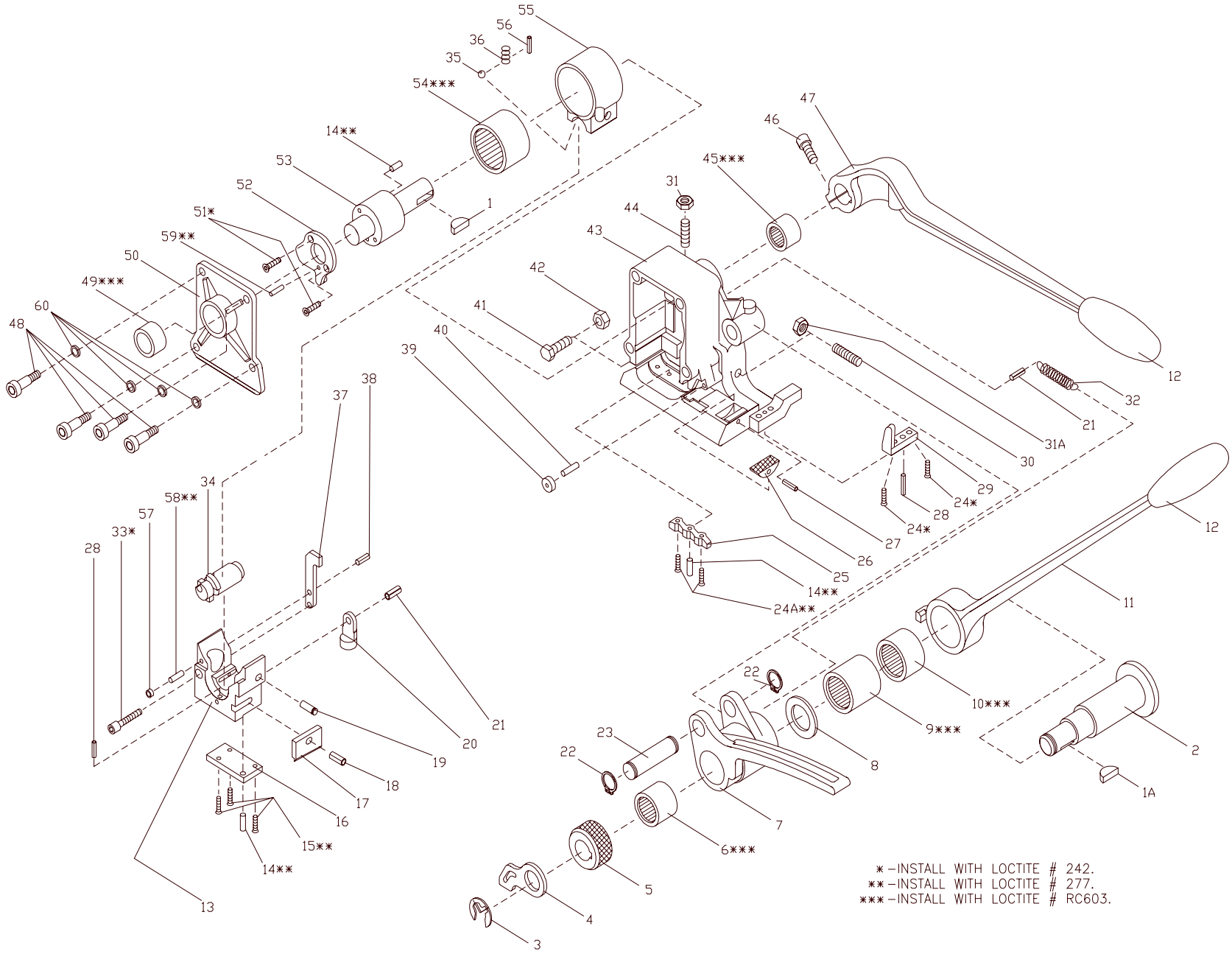

8. MS31 PARTS LIST

POSITION	PART NO.	PART NAME	PARTS PER TOOL
1, 1A	ZR-0001	WOODRUFF KEY	2
2	ZR-0002	FEEDWHEEL SHAFT	1
3	ZR-0003	EXTERNAL RETAINING RING	1
4	ZR-0006	STRAP GUIDE 3/4" (19mm)	1
5	ZR-0074	FEEDWHEEL 31	1
6	ZR-0008	ROLLER BEARING	1
7	ZR-0009	FEEDWHEEL LEVER	1
8	ZR-0010	WASHER	1
9	ZR-0011	ROLLER CLUTCH AND BEARING ASSEMBLY	1
10	ZR-0012	ROLLER CLUTCH	1
11	ZR-0013	TENSION LEVER	1
12	ZR-0014	HANDLE	2
13	ZR-0067	DIE AND KNIFE BLOCK 31 (INCLUDES ZR-0034, ZR-0077)	1
14	ZR-0016	DOWEL PIN	3
15	ZR-0017	CHEESE HEAD MACHINE SCREW	3
16	ZR-0068	DIE 31	1
17	ZR-0069	KNIFE 31 (INCLUDES ZR-0021)	1
18	ZR-0021	SPRING TENSION PIN	1
19	ZR-0022	CONNECTION PIN	1
20	ZR-0023	BACK UP HOOK	1
21	ZR-0024	SPRING TENSION PIN	2
22	ZR-0025	EXTERNAL RETAINING RING	2
23	ZR-0026	SHAFT	1
24, 24A	ZR-0033	CHEESE HEAD MACHINE SCREW	4
25	ZR-0071	PUNCH 31	1
26	ZR-0031	GRIPPER	1
27	ZR-0032	SPRING TENSION PIN	1
28	ZR-0034	SPRING TENSION PIN	2
29	ZR-0037	STRAP STOP FRONT 3/4" (19mm)	1
30	ZR-0038	HEXAGON SOCKET SET SCREW	1
31, 31A	ZR-0039	NUT	2
32	ZR-0040	EXTENSION SPRING	1
33	ZR-0041	HEXAGON SOCKET CAP SCREW	1

8. MS31 PARTS LIST

POSITION	PART NO.	PART NAME	PARTS PER TOOL
34	ZR-0042	CAM	1
35	ZR-0043	BALL	1
36	ZR-0044	COMPRESSION SPRING	1
37	ZR-0045	DIE BLOCK BACK UP	1
38	ZR-0046	SPRING TENSION PIN	1
39	ZR-0047	SPACER	1
40	ZR-0048	PIN	1
41	ZR-0051	STRAP STOP REAR 3/4" (19mm)	1
42	ZR-0052	NUT	1
43	ZR-0072	HOUSING MS31	1
44	ZR-0054	HEXAGON SOCKET SET SCREW	1
45	ZR-0055	ROLLER BEARING	1
46	ZR-0056	HEXAGON SOCKET CAP SCREW	1
47	ZR-0057	SEALING LEVER	1
48	ZR-0338	COVER SCREW	4
49	ZR-0059	ROLLER BEARING	1
50	ZR-0060	HOUSING COVER	1
51	ZR-0061	CHEESE HEAD MACHINE SCREW	2
52	ZR-0078	CAM LEVER (INCLUDES ZR-0028)	1
53	ZR-0063A	ECCENTRIC SHAFT 31 (INCLUDES ZR-0016)	1
54	ZR-0064	ROLLER BEARING	1
55	ZR-0065	ECCENTRIC SHAFT PLUNGER (INCLUDES ZR-0043, ZR-0044, ZR-0064, ZR-0075)	1
56	ZR-0075	SPRING TENSION PIN	1
57	ZR-0076	ROLLER	1
58	ZR-0077	ROLLER PIN	1
59	ZR-0028	DOWEL PIN	1
60	ZR-0339	WASHER	4
—	ZR-0073	OPERATION MANUAL AND PARTS LIST FOR MS31 SERIES TOOLS.	1

CERTIFICATE OF WARRANTY

Z.R. TOOL INC. referred to as ZR hereby warrants its tools as follows:

1. If any part of this tool fails due to poor workmanship or material within 90 days from the date of purchase, that part will be exchanged or repaired at no charge.

   ZR may replace any tool or part with a new or comparable tool or part. Any warranty-repaired item will continue to carry the warranty for the balance of the time remaining on the initial 90-day warranty in addition to time that the item was away for repair.

2. In the event of any warranty claim, all tools or parts must be returned F.O.B. ZR. After analysis, ZR will determine warranty entitlement. All tools or parts returned require an assigned return authorization number, which may be obtained from ZR. This number is to be labelled clearly on all goods returning.

3. This warranty is valid only with a receipt or invoice stating the purchaser's name and address, model number, serial number and date of purchase.

4. ZR reserves the right to substitute new and improved tools or parts at any time.

This warranty does not apply to tools or parts that have been damaged due to accident, abuse, natural or personal disaster, improper use, improper or lack of maintenance, improper replacement of parts, any naturally wearing parts, use of any parts other than genuine ZR parts, tampering or removal of identification nameplate, any unauthorized alterations, repairs or modifications, or using the tool for any application for which it was not sold.

In no event will ZR or its authorized dealers be liable to any purchaser for lost revenue, lost wages, lost savings, or any other incidental or consequential damages arising from the purchase, use, or inability to use this product, even if ZR or its authorized dealers have been advised of the possibility of such damages.

MODEL NUMBER _____

SERIAL NUMBER _____

DATE PURCHASED _____

AUTHORIZED DEALER: